Three Affiliated Tribes
Natural Resource Department
Fort Berthold Rural Water Supply System

Policy and Procedures for Water Service

Resolution No. 08-189 VJB

RESOLUTION OF THE GOVERNING BODY OF THE THREE AFFILIATED TRIBES OF THE FORT BERTHOLD INDIAN RESERVATION

A Resolution Entitled: *"Tribal Business Council Approval of the Fort Berthold Rural Water Program's Policy and Procedures for Water Service."*

WHEREAS, This Nation having accepted the Indian Reorganization Act of June 18, 1934, and the authority under said Act and having adopted a Constitution and By-laws pursuant to said Act; and

WHEREAS, Article III of the Constitution of the Three Affiliated Tribes provides that the Tribal Business Council is the governing body of the Tribes; and

WHEREAS, The Constitution of the Three Affiliated Tribes authorizes and empowers the Tribal Business Council to engage in activities on behalf of and in the interest of the welfare and benefit of the Tribes and of the enrolled members thereof; and

WHEREAS, Article VI, Section 5 (l) of the Constitution of the Three Affiliated Tribes provides that the Tribal Business Council has the power to adopt resolutions regulating the procedure of the Tribal Business Council and other Tribal agencies and Tribal officials on the Reservation; and

WHEREAS, The Tribe and Tribal Business Council has established the Fort Berthold Rural Water Program whose primary responsibility is to develop effective, efficient and safe, drinking water systems for the members of the Tribe on the Reservation; and

WHEREAS, The Fort Berthold Rural Water Program operates the Four Bears, Twin Buttes, White Shield and Mandaree Drinking and Water Distribution Systems; and

WHEREAS, In order to ensure established rules and regulations are set forth for the continuity of the Fort Berthold Water Systems, the Fort Berthold Rural Water Program has developed a "Policy and Procedures for Water Services for the Twin Buttes, Four Bears, White Shield and Mandaree Drinking and Water Distribution Systems; and

WHRERAS, Said Policy and Procedures was presented to and approved by the Three Affiliated Tribes Natural Resource Committee.

NOW, THEREFORE BE IT RESOLVED, that the Tribal Business Council of the Three Affiliated Tribes hereby approves for implementation the Fort Berthold Rural Water Program's Policy and Procedures for water service on the Four Bears, Twin Buttes, White Shield and Mandaree Drinking and Water Distribution Systems.

BE IT FURTHER RESOLVED, that the Tribal Business Council hereby authorizes the Fort Berthold Rural Water Program to enforce these policies and procedures with appropriate sanctions for violations.

CERTIFICATION

I, the undersigned, as Secretary of the Tribal Business Council of the Three Affiliated Tribes of the Fort Berthold Reservation, hereby certify that the Tribal Business Council is composed of 7 members of whom 5 constitute a quorum, 6 were present at a Regular Meeting thereof duly called, noticed, convened, and held on the 13th day of November 2008, that the foregoing Resolution was duly adopted at such Meeting by the affirmative vote of 6 members, 0 members opposed, 0 members abstained, 0 members not voting, and that said Resolution has not been rescinded or amended in any way.

Chairman [✓] voting. [ ] not voting.

Dated this 13th day of November 2008.

ATTEST:

Tribal Secretary, V. Judy Brugh
Tribal Business Council
Three Affiliated Tribes

Tribal Chairman, Marcus Wells Jr.
Tribal Business Council
Three Affiliated Tribes

Title of Section	*Page no.*
Resolution No. 08-184-VJB - Approval of the Fort Berthold Rural Water Program's Policy and Procedures for Water Service	*i.*
1) Statement of Objectives	*1*
2) Terms and Definitions	*1-2*
3) Categories of System Water Users	*3-4*
4) FBRW System Responsibilities and liabilities	*4-5*
5) User Responsibilities and Liabilities	*6-8*
6) Application for Service	*8-12*
7) Service to Users/Service Lines	*12-13*
8) Livestock Service	*13-16*
9) Metering of Service	*16-17*
10) Meter Reading/Controls/Maintenance	*17-18*
11) Adjacent – Reservation User of System	*18-19*
12) Access to Premises/Easements	*19-21*
13) Subsequent User Addition	*22*
14) Extension of Mainlines	*22-23*
15) Future Housing Development	*23*
16) Change of Occupancy	*23-24*
17) Crop Damages	*24*
18) Fire Protection	*25-26*
19) Complaints and Adjustments	*26-27*
20) Suspension of Service	*27-28*
21) Cost of Service	*28*
22) Right to Modify these Rules and Regulations	*28*
23) Approved pointes of diversion	*29*
24) Appendix of typical installation specifications	*app.*

1. STATEMENT OF OBJECTIVES

The Fort Berthold Rural Water Supply System (FBRW) operates under objectives as follows:

- **Statement of Objectives**

1. To establish rules and regulations setting forth the procedure and methods of operation of which will result in a successful operation of the System.

2. To treat all water users alike with respect to recurring situations by establishing rules and regulations.

3. To provide high-quality service to the water users of the System at lowest possible cost, and consistent with the System Water Conservation Plan and sound business practices.

4. To make known to the water users the rules and regulations of the System.

5. To create a favorable image among the water users and general public.

6. To provide to all users of the System the maximum benefits of delivery and supply by recognizing that some users may require additional amounts of water than other users based on family size, special needs, or other factors.

7. To promote and encourage water conservation by the users of the System and the general public and to establish a practice of water system operations, which provides the best prudent use of the facilities of the System.

2. TERMS AND DEFINITIONS

The Fort Berthold Rural Water Supply System (FBRW) uses the following terms and definitions for the purposes of this Policy Manual and Rules and Regulations:

- ADJACENT RESERVATION SERVICE: Any geographic or physical location not meeting the definition of 'On-Reservation' and receives approval for service from the System by the Natural Resources Committee
- BULK USER: Any user of larger quantities of water or any User who take delivery of water on a constant flow basis.
- COMMERCIAL USER: Any establishment that sells merchandise, services or produces a product with the intent to make a profit.
- LICENSED PLUMBERS AND CONTRACTORS: Plumbers and contractors licensed as defined in the North Dakota State plumbing code and who are TERO certified to work on the Reservation.

- LIVESTOCK TAP: The pipeline running from the tapping saddle or tee in the main line to the upstream side of the meter or to the Water Users property line or to a yard hydrant or to a stock watering tank, depending on funding availability. A livestock tap is intended for livestock uses only.
- MAIN LINE OR TRANSMISSION LINE: Pipeline generally paralleling public right-of-way, and serving the distribution system. The main line will generally be located such that it serves, or may in the future serve, more than one user.
- MEMBERS: All Water Users who have complied with the requirements of these Rules and Regulations and have signed a Water Users Agreement.
- NATURAL RESOURCES COMMITTEE. (NRC) The Natural Resources Committee of the Three Affiliated Tribes.
- ON-RESERVATION SERVICE: Any geographic or physical location located within the exterior boundaries of the Fort Berthold Indian Reservation, subject to the jurisdictional boundaries of any incorporated city of the Reservation. On Reservation service may also include lands out of the external boundaries of the Reservation if such lands are so designed by the FBRW or as subject to the Indian Land Consolidation Act.
- OM & R: Shall mean Operation, Maintenance, and Replacement Program as needed and determined by FBRW.
- RECLAMATION (USBR) The United States Bureau of Reclamation.
- SERVICE LINE: The pipeline running from the meter pit or curb stop to the Water User home or to other yard piping or fixtures.
- STANDARD HOUSEHOLD: As used within this Manuel, a standard household is equivalent to a Rural Household User, with a monthly annual average water use of 16,500 gallons per month and with a household size of not more than 5 people residing in the home on an annual basis.
- SYSTEM LINE: The pipeline running from the tapping saddle or tee on the main line to meter pit or to a curb stop. A System line is intended to serve one water user but may be used for multiple users or units.
- SYSTEM: (FBRW) The Fort Berthold Rural Water Supply System, which is a division of the Three Affiliated Tribes of the Fort Berthold Indian Reservation.
- SUBSEQUENT USER OR LATE USER: A user who requests water from the System after such time as the Main Transmission Lines of the area have been placed in service.
- TEMPORARY DISCONNECT: Any interruption of water service not of a permanent nature.
- WATER USER: A member of the FBRW as defined herein.
- WATER USER CONNECTION POINT: The point at which the Water Users private system is connected to the metering point
- YARD AREA: The area of a farmstead, rural residence or cabin site which contains buildings, fences, wells, windmills, buried pipes, buried wires, sewers, or other obstructions such that the installations of buried water line by large high-production trenches or plows is rendered impractical or very difficult.

3. CATEGORIES OF SYSTEM WATER USERS

The FBRW System will maintain water user lists in its files. Water user service shall be classified according to the type of water user hookup. All changes in water user service type must be processed through the System's office. The types of water user service currently classified by the System are:

1. Occasional User: A metered water user hookup to a single family dwelling or trailer or place of business or cabin or other approved service location which is occupied part time or seasonally and which may be within a recognized resort area. Water user at said hookup shall be restricted to household or lawn watering and incidental seasonal livestock watering, and shall not exceed an annual average of 4,500 gallons per month.

2. Municipal Household: A metered water user hookup located at a dwelling or trailer or place of business, or other approved service location with a recognized municipality that does not have a municipal water system. Water use at said hookup shall be restricted to household and lawn watering as well as livestock use, when permitted by the municipality and shall not exceed an annual average of 9,000 gallons per month.

3. Rural Household: A metered water user hookup to a single-family dwelling or trailer or place of business or other approved service location not within the limits or authority of a recognized town. With approval of the System, certain family businesses or other special situation may similarly qualify for service to a household and separate building through one (1) meter. Water use at said hookup shall be restricted to household, lawn watering, and livestock use and shall not exceed an annual average of 16,500 gallons per month.

4. Livestock: A metered water user hookup that is restricted to livestock use. Further requirements of this category of use is given in Part 8 of these Rules and Regulations.

5. Special Bulk: Any metered water user hookup which cannot be adequately served by a standard (5/8" X ¾") meter assembly, that places special demands on the system will be provided service based on a water use contract. The following are examples of "Special" hookups: recognized towns with municipal distribution systems, rural water systems, feed lots, motels, car washes, filling stations, dairies, Laundromats, multiple housing facilities, mobile home and trailer courts, factories, schools, cemeteries, golf courses, parks, swimming pools, and large livestock operations.

Classes of Special Users Are:

a. Class I Special User: Those special users who provide their own storage and pressure and maintain wells for peaking needs.

b. Class II Special User. Those special users which provide their own storage, and the System provides all water needs and which have a population less than 175 and use less than 45,000 gallons per day.

c. Class III Special User: Those special users who have the System supply all the water and storage and pressurize an existing distribution system.

6. High Consumption Users: Any rural household user hookup that uses in excess of 16,500 gallon/month or serves two (2) or more households. High consumption users should subscribe for an adequate number of service units not to exceed six (6) service units (99,000 gallons per month). With approval of the System, one (1) meter can provide service to two (2) or more households at the same location provided both are integral parts of the same farm operation, and persons from both households actually perform labor for the farm operation. High consumption users may be subject to restriction if they use more capacity than they subscribe for or if they violate any standards of water conservation as established by the System.

4. FBRW SYSTEM RESPONSIBILITIES AND LIABILITIES

The Fort Berthold Rural Water Supply System (FBRW) has established System responsibility and liabilities as follows:

1. For all water users except as noted herein, the system will install a System line from its Mainline to a point convenient to the System at or near the edge of the Yard Area of the household, at which point the System will install a meter pit and meter assembly. The System can be available to install Service Line to an approved, dry, frost-proof Water User Connection Point provided by the water user in a house basement or suitable underground location, however such work by System will be contingent upon a grant of Right of Way from the landowner or homeowner and conformance to other requirements of these Rules and Regulations. If an acceptable frost-free Water User Connection Point is not available, the System may install the Service Line as close to the household as possible to allow for the water user to complete the connection.

2. For Livestock water user hookups, the System will install a System Line from its Mainline to a point convenient to the System just within the property described in the water user agreement, not to exceed 400 feet of System line or greater if such added length of line conforms to these Rules and

Regulations. The System will install a meter pit, meter assembly and hydrant.

3. For Subsequent or Late water user hookups of all types, except Special, the System will, subject to available funds and other requirements defined herein, the system will install a System line from its Mainline to a point convenient to the System at or near the edge of the Yard Area of the household, at which point the System will install a meter pit and meter assembly. At the option of FBRW, and with concurrence of the water user, the System may install Service Line to an approved, dry, frost-proof Water User Connection Point provided by the water user in a house basement or suitable underground location. The Subsequent or Late Water User shall have the same responsibility for right of way as an initial user. If an acceptable frost-free Water User Connection Point is not available, the System may install the Service Line as close to the household as possible to allow the water user to complete the connection.

4. For Special water user hookups, the details of the connections will be described in the water use contract.

5. When two or more meters are installed on the same premises for different water users, they shall be closely grouped and each clearly designated to which water user it applies.

6. The System reserves the right to check all meters at any time and will cause all meters to be read at least annually.

7. The System shall not be responsible for the damages due to use of water on water user's premises unless such damage results directly from negligence on the part of the System. The System shall not be responsible for any damage done by or resulting from any defects in the piping, fixtures, or appliances, on the water user's premises. The System shall not be responsible for negligence of third persons or forces beyond the control of the System resulting in any interruption of service.

8. For initial users, the System may, depending on funding and other factors, furnish shower rate flow restrictors, low flow faucet aerators, toilet tank dams, and/or displacement bags. Water Users are required to seek other alternate sources of such equipment prior to being eligible for any FBRW assistance in this area.

9. For late or subsequent Users the System shall have the option of providing such equipment inclusive of meters, depending on funding availability, or requiring the User to provide such equipment.

10. The System reserves the right to discontinue service if the Water Users agreement is not being followed.

11. The System shall be responsible for the OM&R of the system up to and including the curb stop, meter pit, and/or fill station.

12. The System shall not be liable for damage resulting from fires and shall not be obligated to supply any water for fire fighting.

13. The System shall be responsible to restore the area disturbed by the construction of the water distribution pipeline system and ancillary structures, facilities, and improvements, and as near as possible return the said area to its previous conditions.

5. USER RESPONSIBILITES AND LIABILITIES

The Fort Berthold Rural Water Supply System (FBRW) has established user responsibility and liabilities as follows:

1. Piping on the water user's premises must be arranged so that the connections are conveniently located with respect to the System's lines or mains. The water user shall furnish, install, and maintain the Service line, which is from the curbstop or meter box to the water user's point of use.

2. The water user's line or piping must be installed in such a manner as to prevent cross-connection or backflow, and all connections from other sources are to be disconnected. If the water user fails to so install the line or piping as may be required, the System may refuse to provide service.

3. "Subsequent" and "late" water users are also responsible for furnishing, installing, and maintaining the Service line to their homes and fixtures and shall be responsible to supply System approved meters unless the System determines it has available funds to offset a portion or all of such cost.

4. All Service Line shall be installed to the System's requirements and shall be completed either by the System at its option or by a licensed plumber acceptable to the System. Any Service Line completed by the System may be charged to the Water User. Service Line installed by the System shall not relieve the Water User of the responsibility to provide maintenance upon the line.

5. If the water user's piping on water user's premises is so arranged that the System is called upon to provide additional meters, each place of metering will be considered as a separate and individual membership.

6. The Water User shall be responsible to notify the System if the home or service becomes vacated. Water leakage, water damages, or other costs, which arise due to a home or service being vacated, shall be the responsibility of the Water User.

7. The water user's piping and apparatus shall be installed and maintained by the water user and at the water user's expense, in a safe and efficient manner and in accordance with the System Rules and Regulations and in full compliance with the sanitary regulation of the Tribal Government. The water user's private piping shall be installed in such a manner as to prevent cross-connection or back flow, and all connections from other sources shall be disconnected.

8. The water user shall guarantee that the System property be placed on the water user's premises and shall permit access to it by authorized representatives of the System. The Water User shall grant to the System all right of way and easement as may be needed for System Line as, in the opinion of the System may be needed to serve the Water User or any other user of the System ; the Water User shall have the responsibility to provide right of way and easement for all Service Line.

9. In the event that any loss or damage to the property of the System or any accident or injury to person or property is caused by, or results from, the negligence or wrongful act of the water user, his agent, or employees, the cost of the necessary repairs or replacement shall be paid by the water user to the System and any liability other wise resulting shall be assumed by the water user.

10. The amount of such loss or damage or the cost of repairs shall be presented to the water user and, if not paid, services may be disconnected by the System.

11. Water furnished by the System shall be used according to the classification of the water user. The water user shall not sell water to any other person. Water shall not be used for irrigation and automatic sprinkler systems nor other purpose, except that when water is available in sufficient quantity, without interfering with the regular classified use, in the area served, the water may be used for any lawful purpose. Disregard for this rule shall be sufficient cause for the refusal or discontinuation of service.

12. In regard to watering livestock, the water user may be required to provide a constant flow valve or other device acceptable to the System, so that water will be more uniformly delivered to the livestock throughout a twenty-four hour period. This policy may also be applicable to water users using water for spraying and other high water usage other than domestic use which may cause undo hardship to other water users of the System. Stock watering devices must be equipped with

atmospheric vacuum breakers. Additional requirements are noted in Section 8 of these Rules and Regulations.

13. The water user shall maintain the setting of the pressure reducing valve at a setting of not greater than 45 psi.

14. The Water User shall be required to adhere to the FBRW Water Conservation Plan as a requirement for service from the System.

15. All water users of FBRW are required to cooperate with the efforts of FBRW to provide water to other users or potential users of the System including the requirement for an existing user to provide and grant easement and right of way as may be needed to service or cross lands with System facilities to provide service to adjacent users.

6. APPLICATION FOR SERVICE

The Fort Berthold Rural Water Supply system (FBRW) utilizes the following policy to document and approve applications for service:

1. The individual/entity requesting water service from the Fort Berthold Rural Water Supply System must submit a written application/request for water service to the (FBRW System), referred to as the System, and Reclamation.

2. An evaluation will be conducted jointly by the System and Reclamation to determine if the hydraulic capacity of the MR&I water system is adequate to serve the proposed individual or entity without adversely effecting existing and proposed MR&I deliveries. Adequate pressure and flows must be verified to ensure health and safety requirements are met.

3. Concurrence will be obtained jointly from the System and Reclamation that water service may be provided. The means of providing construction and the funding source to pay for installation expenses will also be identified and approved.

4. National Environmental Policy Act (NEPA) compliance must be obtained before construction of the water service pipeline and associated facilities is approved and/or initiated. A minimum of thirty (30) days is required to complete NEPA activities. The NEPA compliance should cover:

a. Any proposed pipeline route that is planned to be constructed.
b. Construction from the main transmission pipeline connection to the connection with any existing water service facility of the individual/entity requesting water service.
c. The end location of the new service to be constructed.

The entity that prepares the required NEPA documents will be subject to approval by Reclamation. Reclamation will be the responsible agency for assuring NEPA compliance for individual water service connections funded in whole, or in part by Reclamation. Reclamation will be the responsible agency for assuring NEPA compliance for individual water service connections privately funded in whole or in part by either Reclamation money or money from other sources. Indian Health Service (IHS) will be the responsible agency for individual water service connections funded entirely by IHS. Under no circumstance will construction commence prior to NEPA approval.

5. A cultural resources/archeological inventory of the proposed pipeline area must be completed prior to construction of the water service pipeline and associated facilities to assure compliance in accordance with the National Historic Preservation Act (NHPA). The results of the inventory will be documented. Consultations with the State Historic Preservation Officer(s) (SHPO)/Tribal Historic Preservation Officer(s) (THPO) on the effects of the proposed pipeline installation will be completed before construction is approved and/or initiated.

The entity that prepares the required cultural resource documents will be subject to approval by Reclamation. Reclamation will be the responsible agency for assuring cultural resources and archeological compliance for individual water service connections funded in whole or in part by Reclamation, and for connections privately funded in whole or in part. IHS will be the responsible agency for individual water service connections funded entirely by IHS.

A cultural resource and archeological inventory of the proposed pipeline area may require considerable time to complete due to scheduling constraints, weather, etc. A minimum of thirty (30) days is required for completion of NHPA activities. Under no circumstances will construction commence prior to a cultural resource and archeological inventory being completed by a Reclamation approved organization of the pipeline route or location served.

6. Funding for construction of the water service pipeline and associated facilities may come from the individual requesting water service, Tribal funds, Indian Health Service, or other approved sources of funding. Construction costs shall include, but not be limited to: the costs of design and specification preparation, rights-of-way easement acquisition, National Environmental Policy Act (NEPA) compliance, National Historic Preservation Act (NHPA) compliance, pipeline installation and associated activities, installation inspection, and creation of record drawings. All individuals and entities involved in paying

for the facilities must approve sources of funding for construction of the facilities in advance. A means of making payment for costs incurred must also be agreed upon in advance.

7. Ownership and maintenance responsibility of the water service pipeline and associated facilities during construction will be with either the individual or the applicable agency. The participant that provides the funding for construction of the water service pipeline and associated facilities will be the party responsible for OM&R except as such ownership and OM&R responsibilities are conveyed by such participant to the FBRW. The funding entity will be responsible for obtaining all permits prior to construction for water discharge, utility crossings, road crossings, etc.

8. In order to become part of the System and have the OM&R costs covered by the GDU Indian MR&I program, designs and specifications must be submitted to Reclamation for approval.

9. Water service pipelines and associated facilities will not be constructed with operation, maintenance and replacement (OM&R) funds made available to the Tribe under the water distribution systems operation and maintenance cooperative agreement with Reclamation.

10. Water service pipelines and associated facilities which are to be included in the Garrison Diversion Unit MR&I program will be designed and adequately sized to be compatible with the reservation-wide MR&I phased development requirements. All designs must be submitted to Reclamation with adequate time to confirm design and hydraulic capability of the pipeline.

11. All designs and specifications for the proposed water service pipeline and associated facilities shall be prepared and submitted for review and approval by Reclamation prior to construction activities. Standard pre-approved specifications and drawings may be utilized with additional site-specific specifications and drawings as necessary. Under no circumstances will construction begin prior to a registered professional engineers review and approval of the site-specific location to be served.

12. All required rights-of-way to construct the water service pipeline and associated facilities must be provided to Reclamation prior to initiation of construction. All required rights-of-way for Reclamation to operate, maintain, and replace the water service pipeline and associated facilities up to and including the service shutoff valve (curb stop), or meter pit assembly and meter pit components, must be provided to Reclamation prior to Reclamation taking over OM&R responsibility of the water service pipeline and associated facilities up to the service shutoff. Under no circumstance will

construction commence without a written right-of-way easement being completed by a Reclamation approved organization for the pipeline route of location served. Trust property and BIA rules on R-O-W must be followed. Fee Tracts must abide by USBR title insurance if required.

13. Any organization installing water pipelines and associated facilities that connect to Reclamation funded projects shall submit as-built drawings upon completion of construction. As-built drawings shall be prepared and submitted to Reclamation by the organization installing the water pipeline and associated facilities. A legible copy of the contractor's field drawn as-builts shall be submitted to Reclamation within 30 days after the completion of construction. An office drawn, quality set of as-built drawings, that include a drawing scale, shall be prepared and submitted in legible format (and electronic version if available) to Tribal Utility and Reclamation within 60 days after completion of construction.

14. The System may reject any application for service if: (1) excessive service cost is involved; (2) the service may affect the supply of service to other water users; or (3) for other good and sufficient reasons as determined by the System and which shall be specified to the application.

15. To be eligible to receive water on any land owned by the User, the water user must give an easement to the System. Refusal to give the easement makes the water user ineligible for service and is grounds for rejection of the applicant.

16. Applications for service to country churches may be accepted and classified under the type which best define their water use. Generally, country churches will be classified as an Occasional user service and shall be subject to the same conditions, except water usage. Where a parsonage is involved, the application shall be considered as a Rural Household hookup. Country churches not adjacent to existing main Service Lines are classified as a Rural Household hookup. A church within a community served as municipal users will be classified as a Municipal User.

17. Every application for service shall execute an Agreement with the System. The agreement states all applications shall faithfully abide by the System Rules and Regulations of the System as a condition of membership and in consideration for the services provided for by the System. Water Users, as a condition for service must acknowledge receipt and acceptance of the Rules and Regulations. All applicants, as a part of the application, shall agree to allow the System all rights-of-way, easements, and such access to the property of the applicant as reasonable and necessary to provide service to the property of the applicant and other users of the system. The Agreement will confirm that water service to the user is at no charge

subject to the provisions of the System Water Conservation Plan and subject to annual appropriations for the accommodation of such costs.

18. No party shall be eligible for service from FBRW if they hinder or interfere with FBRW System construction or operation in any fashion, including failure to grant right of way for placement of lines or appurtenances as may be needed to serve other applicants to the System.

7. SERVICE TO USERS/SERVICE LINES

The Fort Berthold Rural Water Supply System (FBRW) utilizes the following policy to provide service to its various categories of water users:

1. Unless otherwise noted, all categories of water users will be provided water service as follows:

a. Upon completion of and acceptance of a water application form, the FBRW will install not less than a 1½" PVC System line from the FBRW Main Distribution line to the water user as follows:

i.) Such System line will be installed as possible along a route and within an area to do the least surface damage or other disruption to the water users, however, the final determination of such route shall be by the FBRW.
ii.) FBRW shall have no responsibility for disruption, damage, or repair to any subsurface utilities or facilities of any water user; the water user takes all responsibility for such occurrences and is obligated to notify FBRW of their existence.
iii.) FBRW will place, at their option, a separate meter pit on the water users property or FBRW will utilize a frost free location for such equipment as may be provided by the water user.
iv.) FBRW may install, at their option, by either open cut or bore, a line from the meter pit or other frost free structure into the home of the water user. In an instance of a mobile home, FBRW may provide a mobile home hookup under the home.

b. All easements, rights of entry, special permits, and other similar items must be furnished by the water user, landowner or homeowner to FBRW, or to a designated agency as may be decided by the FBRW, as a condition of service prior to startup of any construction activity in the area.

2. By option of either FBRW or the water user, service to water users may be provided to any water user by a meter pit only.

3. System water users of the category of 'Special Bulk' shall be subject to water service line construction and provision on a case by case determination as will be made by FBRW.

4. System water users of the category of 'Livestock' shall be subject to water service line construction and provisions according to Part 8 of these Rules and Regulations.

5. The FBRW System shall place a priority of use and provision of water to household users above all other users. In event of water shortages, funding shortages, or other interruptions of system operation, the FBRW shall first maintain service to households. Users of water for commercial or industrial uses shall be the first categories of users who shall be subject to delivery restrictions subject to terms of any agreements in place with such users. Livestock users shall be a priority of service from FBRW subject only to the priority given to household users.

8. LIVESTOCK SERVICE

Fort Berthold Rural Water System places a secondary priority on livestock watering after domestic and municipal water supply and delivery. Livestock service will only be provided to the extent that funding of the needs of the domestic and municipal users is not significantly adversely affected or delayed. FBRW may, at their option, defer the installation of pasture taps during the phased development of any Segment of the Reservation.

The Fort Berthold Rural Water System (FBRW) utilizes the following policy to provide service to Livestock users:

1. The FBRW may, in addition to Part 5, and according to the provisions of these Rules and Regulations, install additional lengths of service line to approved livestock water users.

Livestock hookups are offered to users as follows:

a. Livestock hookups for any 'on-reservation' service, as defined herein, are available to all water users when System lines are limited to within 400 feet of a main line.

b. Livestock hookups for any 'adjacent-reservation' service, as defined herein, are available to all water users when System lines are limited to within 400 feet of a main line.

c. Livestock hookups involving System line extensions beyond 400 feet for 'adjacent-reservation' service, as defined herein, are available to water users only with full user reimbursement to FBRW for any cost incurred by FBRW beyond 400' from a main line.

d. Livestock hookups involving System line extensions beyond 400 feet for 'on-reservation' service, as defined herein, are available

to water users to distances further than 400' of a main line under the following conditions:

i.) The water user shall pay to the FBRW associated costs incurred by the additional length of line, according to Part 7 of this Section or

ii.) The water user agrees to participate in available and appropriate State or Federal cost share programs to achieve reimbursement for the costs incurred by the additional length of time. Such programs specifically include the Federal Natural Resource and Conservation Service (NRCS) land conservation programs.

e. Livestock hookups are available for each water user of the System, subject to these Regulations, to the extent that 1 such hookup will be provided per contiguous pasture area. If a water user desires more than 1 livestock hookup in a single pasture, the FBRW will consider such requests on a case by case basis. Criteria to be used by FBRW to determine provision of additional livestock hookups for an individual water user shall include distance and area of pasture, size of livestock operation, cost and construction considerations and potential for sharing of such additional hookup with adjacent users.

2. Livestock users of the FBRW will be provided water, as available, on a constant flow basis. Categories of constant flows available are as follows:

a. Small users shall be allocated not less than 2 gpm.
b. Moderate users shall be allocated not less than 5 gpm.
c. Large users shall be allocated not less than 7 gpm.
d. Very large users shall be allocated flows based on a case-by-case determination by FBRW.

For all categories of users (small, moderate, large, or very large) the FBRW shall make such determinations. For all users the total amount of water which shall be made available to the Water User shall be determined by FBRW.

3. Livestock water use is recognized as a secondary use of the FBRW System. No assurance of long term availability of such water is provided to any livestock user. In a instance of limitations of water, or funding, to provide water within the System to any other category of water user, the FBRW reserves the option to limit or interrupt flow to livestock users.

4. All livestock users are responsible to provide and install equipment or controls which will limit the flow to the amounts stated herein. All such equipment must be approved, in advance, by the FBRW and shall be subject to periodic inspection by FBRW as they may determine. Typical types of

equipment to accomplish this include flow restrictors (which FBRW may install at their option), other control valves, tanks with shut off floats or controls, or other. FBRW will provide a list of approved equipment to the Water User prior to installation of System facilities to the User.

5. All livestock users shall demonstrate to FBRW that water received from the System is adequately contained and controlled so no water becomes wasted upon the ground.

6. The FBRW will install, to all approved livestock users, the following equipment:

a) Up to 400' of 1½" PVC System line (or larger or longer if so determined by the FBRW).

b) A meter box, subject to the requirements of Part 7 of these Rules and Regulations.

c) A frost-free yard hydrant, which shall be provided by FBRW to the User but installed by the User at the end of his Service line.

7. The FBRW shall recover the cost of System line extension to livestock users beyond 400 feet of a distribution line as follows:

a) 100% of all line extension to 'adjacent-reservation' livestock users shall be recovered from the user.

b) 50% of all line extension, not to exceed 1,000 foot total length, to 'on-reservation' users may be paid by FBRW subject to available funds on a case by case basis; all funds not provided by FBRW or any other available program shall be paid by the water user.

c) 100% of all line extensions beyond a total of 1,000 feet (total length of line) to 'on-reservation' users shall be paid by the water user.

8. Any payments due by a livestock water user to the FBRW may, at option of FBRW, be provided by the water user in one of the following ways:

a) The livestock user may pay his share, in full, the costs of line extension beyond 400 feet. This is the only option of payment for livestock users in 'adjacent-reservation' locations.

b) The livestock user may, as such other requirements are met, request a payment schedule be arranged for his share between the FBRW and the user for such costs.

9. In all instances of livestock water service, the water user shall be responsible for the operation of such line to assure adequate turn over of water within the line.

10. In all instances of livestock water service, the FBRW shall determine the location of the meter pit. The FBRW shall be responsible for OMR of the System facilities, inclusive of System line, up to and including the meter pit and the water user shall be responsible for OMR of all Service line or appurtenances past the meter box.

9. METERING OF SERVICE

As a primary goal of adhering to and enforcing the System Water Conservation Policy , the Fort Berthold Rural Water Supply System (FBRW) utilizes the following policy relative to the metering of services as follows:

1. A permanent residence, business facility, or similar building will require one membership, and have one meter. All other water users shall be metered separately, except as follows:

a. Water users who have their homes on the same premises as their commercial establishment and who receive service through the same meter and service line.

b. In the case of person or persons living in separate dwellings on the premises of the water user and in a joint farming of business operation, receiving half or more of their subsistence from the water user or direct relief, old age assistance, social security or other social welfare funds and receive service through the same service line, service may be included for both on the same meter. In this case, the water user shall file with the System a statement to the effect that such is the case.

2. A permanent residence, which may be a mobile home or other dwelling, not associated with a farming operation, will be required to establish a separate membership, and have a separate curbstop and meter as if it were a single permanent residence, except as may be otherwise exempted under these policies.

3. Two or more permanent dwellings on a farm including manufactured homes placed in a permanent foundation shall be considered as multiple housing units requiring separate memberships.

4. Trailer courts and multiple housing units shall be required to have a separate membership as a "contract" user. All units can be served by one meter; however, a separate storage facility may have to be installed by the member in cases where there may be an excessive demand for water. Each case shall be reviewed by the System on an individual basis.

5. Seasonal dwellings of part-time residents, and range operations, which are separated and/or independent of farm or

ranch location, will be required to have a membership and a meter.

6. When two or more meters are installed on the same premises for different water users, they shall be closely grouped and each clearly designated to which water user it applies.

7. The System reserved the right to refuse service unless the water user's line or piping is installed in such a manner as to prevent cross-connection, or back flow, and all connections from other sources are disconnected.

10. METER READING/CONTROLS/MAINTENANCE

The Fort Berthold Rural Water Supply System (FBRW) utilizes the following policy to accomplish meter reading and maintenance.

1. Meters and controls have to be either in a meter box or, as FBRW shall agree, in a location provided by the landowner, which is frost proof, secured, and assessable to the operator.

2. The main purpose of the meter is to assure conformance to the Water Conservation Plan. Water use over the designated and approved amounts per user may be chargeable to the user. Water use allowed per user is provided by Part 3 of these Rules and Regulations.

3. The main purpose of controls are to prevent backflow into the system and to control pressure. The types of controls and allowed pressure to each user will be determined by the FBRW.

4. The System operators shall read and record usages according to a set schedule as determined by FBRW.

11. ADJACENT- RESERVATION USER OF SYSTEM

The Fort Berthold Rural Water Supply System is for the use and benefits of all on-reservation users and residents within the parameters of this Policy Manual. Users adjacent to the Reservation who desire service are advised to contact their local water authority for such service and assistance. Unless a benefit is derived from FBRW providing service to an adjacent reservation user, such as a grant of right of way for an on reservation facility, the FBRW shall not provide water to individual users off the Reservation. The FBRW may however, by their own option, provide bulk water service to qualified and approved water development groups adjacent to the Reservation pending mutual arrangement and agreement for recovery of costs and of water availability for such service.

The Fort Berthold Rural Water Supply System (FBRW) utilizes the following policy for the provision of service to adjacent-reservation users:

1. Individual applications for service to FBRW shall be received and reviewed from adjacent-reservation users according to the same format and guidelines as required for on-reservation users, except as follows:

a) Unless otherwise determined by FBRW, the adjacent-reservation user shall be solely responsible for all easements, permits, rights of way and other items of a similar nature.

b) Unless otherwise determined by FBRW, the adjacent-reservation user shall be solely responsible for design, construction, inspection and OMR of the facilities needed for service however such activities shall be reviewed by FBRW prior to approval for service.

2. For individual users the FBRW reserves the right to grant 'on-reservation' status to 'adjacent-reservation' users for purposes as follows:

a) When such adjacent-reservation users are tribal members.

b) When such arrangement allows FBRW to secure needed permits or easements for the purpose of service to other on-reservation users or adjacent-reservation tribal members.

c) Benefits of an 'on-reservation' user are not available to 'adjacent-reservation' users relative to the category of livestock use. An 'adjacent-reservation' livestock user is subject to the requirements of Part 8 of these Rules and Regulations.

3. In instances where FBRW choices to serve an adjacent-reservation individual user under the conditions of 'on-reservation' status, the FBRW will be responsible for the permits, easements, design, construction, and OMR for the facilities to the same extent are offered to on-reservation users.

4. Bulk Service applications for service to FBRW shall be reviewed on an individual basis but generally shall be subject to the following:

a) The FBRW shall attempt to provide system facilities to the border of the Reservation to the extent funding and water from the System is available.

b) The cost of upsizing or extending facilities to serve such requests shall be calculated in an 'incremental' manner, and reimbursement or arrangement for reimbursement shall be in place prior to approval of any request.

c) The on-going 'OMR' cost of the FBRW facilities as needed for the supply of water to such users shall be determined and agreed upon prior to approval of any request. The FBRW may, at their option, request OMR reimbursement according to the following:

i.) Full reimbursement based on the 'incremental' cost of OMR of the appropriate facilities.

ii.) Full reimbursement based on the 'pro-rata' cost of OMR of the appropriate facilities.

iii.) By any other method agreed upon by both parties.

12. ACCESS TO PREMISES/EASEMENTS

The Fort Berthold Rural Water Supply System (FBRW) utilizes the following policy for access to premises and easements:

1. Duly authorized agents of the System shall have access, at all reasonable hours, to the premises of the water user for the purpose of installing or removing the System's property, inspecting piping, reading or testing meters or for any other purposes in connection with the System's service and facilities.

2. Duly authorized agents of the System shall have access, at all times, to the premises of the Water User for the purposes of emergency repairs or maintenance as may be determined necessary by FBRW.

3. Each water users shall grant or convey, or shall cause to be granted or conveyed, to the System a permanent easement and right-of-way across any property owned or controlled by the water user, wherever said permanent easement and right-of-way is necessary for the System's water facilities and lines, so as to be able to furnish service to the water user. Failure to grant or convey such permanent easement and right-of-way shall be cause for the System to refuse to serve said consumer.

4. In the event the System requests an easement to facilitate the construction of its system, and the owner of the parcel across which the easement is requested refuses to grant an easement, then the following rules apply:

a. The System shall redesign the affected portion of the system in order to avoid the property over which an easement has not been granted, and the increase in cost necessitated by that change should be recorded in the records of the System.

b. At such time as the person who owns the parcel over which an easement was refused requests water service from the System, then the applicant for service shall be required to pay for the increased construction cost described above, as well as any application fees.

c. These rules apply to water service requested on the parcel upon which the easement was refused, as well as the request

for service on any other property owned by the person who refused to grant an easement.

d. The construction cost recapture provisions of this policy shall run with the land and with the person who refused to grant an easement.

e. Nothing contained in this policy shall be construed as a waiver of System's power of eminent domain.

5. System will negotiate with the owner of the subject real estate to arrive at a mutually acceptable purchase price of sites for secondary pumping stations, pneumatic pump stations, main line pressure reducing or control valves and water storage tanks. If the System deems it appropriate, System will engage the services of a qualified third party to appraise some of the larger sites. The appraised price will then be used as a base for further negotiations.

6. Nothing contained in this policy shall be construed as a waiver of System power of Eminent Domain.

7. Any land which is condemned to accommodate a pipeline cannot receive tribal water unless the cost and fees paid, inclusive of attorney, court, engineering, and administrative fees are repaid to the tribe.

8. For acquired easement the following applies:

a. Easements will be secured for ¼ section parcels with FBRW ability to place the line at any point within the parcel according to terms herein .

b. All acquired easements for purpose of survey or non-construction activity will be 100' in width, generally following the R/W line with the pipeline envisioned in the center of such corridor.

c. All acquired easements for purposes of construction of pipeline will be 50' in width, generally following the r/w line with the pipeline to be located in the center of such corridor.

d. Line which deviates away from the R/W line will continue to be in a 50' corridor which will be defined as 25' either side of the installed line wherever such line may lie.

e. The FBRW will pay for land damages and crop damages if any are caused by actions of the FBRW.

f. During construction all easements are construction easements; for construction easements FBRW agrees to stay within the described corridor, agrees to compensate the landowner for damages caused, if any, and agrees to leave the site in a

cleaned up and mounded condition. After one year has passed FBRW agrees to come back to the site and repair settlement areas.

g. After construction all easements are maintenance easements; for maintenance easements FBRW has the right to access the land for repair and replacement purposes but agrees to pay for any damages caused by such repair or replacement action. The landowner cannot put structures within the easement.

13. SUBSEQUENT USER ADDITION

The Fort Berthold Rural Water Supply System (FBRW) utilizes the following policy for subsequent user addition:

1. An applicant who makes application after the area distribution project has been substantially completed is a subsequent user.

2. The System shall have no obligation to provide water service or facilities to subsequent users, but may provide such service if funds are available and if the Natural Resource Committee provides such authority.

3. Subsequent users shall make application according to the applicable policy guidelines of the System.

4. The System will not provide water service or water infrastructure to any subsequent user until a hydraulic analysis and cost of service analysis has been performed. Based on such analysis, the System may deny or impose restrictions on such service to subsequent users.

5. After project construction, additional applicants for service may be required to pay a nonrefundable fee, in the amount established by FBRW, to cover engineering costs for determining feasibility and water availability.

14. EXTENSION OF MAINLINES

The Fort Berthold Rural Water Supply System (FBRW) utilizes the following policy for extension of mainlines:

1. The System's contribution for mainline extension costs shall be determined at the time of application. The applicant may be required to contribute the difference between the actual cost of the mainline extension and the System's contribution, in addition to the other payments required.

2. In the event the System does not have funds available to make its mainline extension contribution, it may agree to extend service provided the applicant agrees to deposit the total cost of the extension. In such case, the System may, as funds become

available, return to the applicant that portion of his deposit equal to the System's mainline extension contribution. No interest will be paid on such deposits.

3. In those cases where extension of standard water Mainlines proves to be too costly, or capacity is not adequate, the System may authorize service on a "constant-flow" basis. The applicant must provide a proper cistern or reservoir with appropriate backflow and overflow (float shut-off) protection. It will be the responsibility of the applicant to re-pressurize the water delivered through the constant-flow valve. Water user hook-ups on such extensions shall be classified as Special.

15. FUTURE HOUSING DEVELOPMENT

The Fort Berthold Rural Water Supply System (FBRW) utilizes the following policy for extension of housing developments:

1) Applicants for service planning a Future Housing Development may be required to pay the following:

a. A proportionate share of the cost of the portion of the common facilities of the project necessary to deliver water to a common delivery point most convenient to the Future Housing Development.

b. The cost of any pipeline, connectors, pumping stations, tanks, valves, and other appurtenances constructed for the sole purpose of delivering water to the Future Housing Development from a common delivery point designed by the System.

2) The developer will provide funds for necessary Service Lines and distribution system within the development. Such work will be designed and installed by the System. Said improvements shall be dedicated to the System when construction is complete.

3) Home purchasers within the development must become members of the System.

16. CHANGE OF OCCUPANCY

The Fort Berthold Rural Water Supply System (FBRW) utilizes the following policy for change of occupancy:

1. Not less than seven (7) days notice in writing shall be given by the Water User to the System to discontinue service or change occupancy.

2. The outgoing Water User shall be responsible for all water consumed up to the time of departure, the time specified for departure, or seven days following request for termination, whichever period is longest.

3.Memberships shall remain at the location of the service connection. A member selling property in which a service connection is located shall relinquish his/her membership in the System. Therefore, in the case of property being sold, or transferred, the System membership and water hook-up will remain with the property. A member is not entitled to transfer their membership to a new property location, except upon prior approval of the System.

17. CROP DAMAGES

The Fort Berthold Rural Water Supply System (FBRW) utilizes the following policy for crop damages:

1. Crop, pasture and fallow damage will be paid for the original construction of the main transmission pipeline as set forth below

2. If crops are damaged because of the installation of main transmission pipeline, the owner or owners (as their interests may appear) of the crops shall be compensated based upon that crop year's actual average yield for the field in which the damage occurs, with compensation to be based upon the price of the damaged crop at the time of harvest.

3. Damages to fallow ground will be paid at the rate equal to the rented value of such land according to current County averages.

4. Damages to pasture ground will be paid at the rate equal to the rented value of such land according to current County averages.

5. System will reimburse the owner or owners (as their interest may appear) for crop damage resulting from the repair, operation and maintenance of main transmission pipeline. System will only pay crop damage accruing after the portion of the main transmission pipeline in question is constructed, in operation and the warranty period covered by the contractor responsible for constructing the main transmission pipelines shall be responsible for any such crop damages, all as provided in the contract documents. System will assist the owner or owners of the crop when making claims against the contractor for crop damages. Compensation for crop damages shall be based upon that crop year's actual average yield for the field in question, based upon the price of the damaged crop at the time of harvest.

6. If the owner or owners and System cannot agree upon the amount of crop damage, damage to fallow ground, or damage to pasture ground, then such damages will be ascertained and determined by three disinterested persons, one to be appointed

by the owner or owners, one to be appointed by the System, and a third party to be appointed by the two previously appointed individuals. Their determination of damages shall be binding upon the owner and System.

18. FIRE PROTECTION

The Fort Berthold Rural Water Supply System (FBRW) utilizes the following policy for fire protection:

This policy addresses the use of Fort Berthold Rural Water System's water in case of a fire. The system is not designed to provide fire protection either in terms of providing hydrants at locations that might be desirable or in terms of providing for flow rates which might be desirable for said purpose. Nevertheless, the System recognizes that its facilities and water availability may be beneficial for protecting its membership and surrounding communities from damage and loss due to fire, and therefore, FBRW has adopted this policy:

1. Fire Protection for System's Rural Areas

a. System will choose the location of and the frequency of locations for hydrants, blow-offs, or other facilities (Facilities) to be used by qualified persons for fire prevention and fire control. Fire Departments may be granted permission to use water from System hydrants, blow-offs, and cleanouts for fire fighting. The costs of hydrants, blow-offs, or clean-outs added for fire fighting may be the responsibility of the requesting agent.

b. All Facilities will be installed, maintained, and operated by System and its employees, or other persons deemed qualified by System. Where feasible, those Facilities may be equipped with a locking device operable by System and qualified Fire Departments.

c. System will not charge for water used directly for fire protection activities.

d. Water will be withdrawn under gravity-flow conditions only. A suction-type pumper truck will not be permitted to withdraw water from System pipelines. All hoses used to draw water shall be equipped with an anti-siphon end fitting.

e. Before a Fire Department will be granted permission to use water from System, that Fire Department must have on file with System a Comprehensive Indemnify Agreement indemnifying System from any loss or damage sustained as a result of permitting that Fire Department to use System Facilities for such purposes.

2. Fire Protection for System Area Municipalities

a. Any municipality requesting fire protection must file a request with the Natural Resources Committee, which request the Committee in its sole and exclusive discretion will determine.

b. System's purpose is to provide potable water to its users, and fire protection was not included in its authorization. Therefore, any additional costs due to oversizing of pipe or other equipment to provide fire protection shall be the responsibility of the municipality

c. System will not charge for water used directly for fire prevention activities.

d. Water will be withdrawn under gravity-flow conditions only. A suction-type pumper truck will not be permitted to withdraw water from System's pipelines. All hoses used to draw water shall be equipped with an anti-siphon end fitting.

e. The Municipality shall be responsible for the purchase of hydrants and for maintenance and replacement of those hydrants.

f. Flow rates are subject to approval of the System in its sole and exclusive discretion.

g. Before a municipality will be granted permission to use water from System for fire protection, that Municipality must have on file with System a Comprehensive Indemnity Agreement indemnifying System from any loss or damage sustained as a result of permitting that Municipality to use System's Facilities for such purposes.

19. COMPLAINTS AND ADJUSTMENTS

The Fort Berthold Rural Water Supply System (FBRW) utilizes the following policy for complaints and adjustments:

1. If the water user believes his meter reading to be in error, he shall present his claim at the System office.

2. Meters will be tested at the request of the water user upon request to the System. System shall replace defective meters after making the test, provided; however, that if the meter is found to over or under register beyond three percent of the correct volume, no change will be made.

3. Without written authorization, the water user shall not break the meter seal. The System may test or cause to be tested a meter with a broken seal. The water user may be subject to pay the actual cost to the System of replacing a broken seal.

4. In the event a dispute arises on an issue other than meter reading, it shall be first brought to the attention of the System. If the System cannot resolve the dispute, the water user can bring the claim before the Natural Resource Committee of the Three Affiliated Tribes.

20. SUSPENSION OF SERVICE

The Fort Berthold Rural Water Supply System (FBRW) utilizes the following policy for suspension of service:

1. When water service is disconnected at the request of the water user, the water user waives his/her rights to membership in the System and rights to water service at the meter location in question. Any application for water service at a later time will be considered and treated as a new membership. The location will only be served if it is determined that water capacity exists to serve the location.

2. The System reserves the right to discontinue its service, on a permanent or temporary basis, without notice, for the following additional reasons:

a. To prevent fraud or abuse

b. Water user's willful disregard of the System's rules

c. Emergency repairs.

d. Insufficiency of supply due to circumstances beyond the System's control.

e. Legal processes.

f. Direction of the Natural Resources Committee

g. Strike, riot, fire, accident, or any unavoidable cause.

h. To prevent system contamination through an unintentional or intentional cross-connection.

3. The System may, in addition to prosecution by law, permanently refuse service to any water user who tampers with a meter.

4. For violation of any of the provisions of these rules relating to application for service, the System may, at the expiration of seven (7) days after mailing a registered notice to the last known address of the water user, remove the meter and disconnect service. Where the meter is thereafter reinstalled, the water user shall pay to the System Reconnection Charge prior to service, in the amount established by FBRW

21. COST OF SERVICE.

To the extent possible as can be made available by funding of the construction of the FBRW System through appropriations of the Dakota Water Resource Act of 2000, and other similar State or Federal programs of water development, and as annual appropriations are secured and received by the USBR through current and ongoing government appropriations for System OMR functions, the water provided to all Water Users of the System shall be at no cost subject to any contract or agreement provisions to the contrary with any User. However the FBRW shall retain the right and authority to make a charge for services or water to any Water User of the System by the following:

1. A fee may be charged to any Water User who violates the terms of these Rules and Regulations, or the Water Conservation Plan.
2. A fee may be charged to any Water User who creates, by failure to grant or cooperate, a cost for right of way to FBRW.
3. Damages which occur the System facilities by any Water User may be charged against such water User.
4. Fees may be charged to all Water Users to accommodate events of insufficient appropriation from the government for OMR or non-appropriation. The FBRW reserves the right to structure such fees to place a lesser burden on household users than may be placed on other categories of users.

22. RIGHT TO MODIFY THESE RULES AND REGULATIONS.

Until such time as these Rules and Regulations become ratified by the Business Council of the Three Affiliated Tribes, they shall be utilized in an interim fashion. All users shall abide by such Rules until and unless subsequent changes are implemented by the Business Council. Any changes made to these Interim Rules and Regulations shall be binding on all current members of the System as well as future members. However any subsequent change to these Interim Rules and Regulations which substantially affect the service or conditions of service as provided to an existing user at the time of change shall afford the existing user an opportunity to request a variance of such changes to the Natural Resource Committee.

23. APPROVED POINTS OF DIVERSION

The Fort Berthold Rural Water System (FBRW) has established the following criteria for approved points of diversion for water delivery to users of the system:

1. For all categories of users, unless otherwise exempted, water use from the System to the User must be conveyed through a System approved or provided meter and check valve.
2. For selected bulk user applications, the System may provide a community "fill station" which shall be regulated and controlled by System provided meter(s) and check valve(s).
3. 3. In no event and under no circumstance shall water delivery be made to any user, which places a risk upon the System of backflow, contamination to either the System or User, or excessive pressure or flow interruption to the other Users of the System.

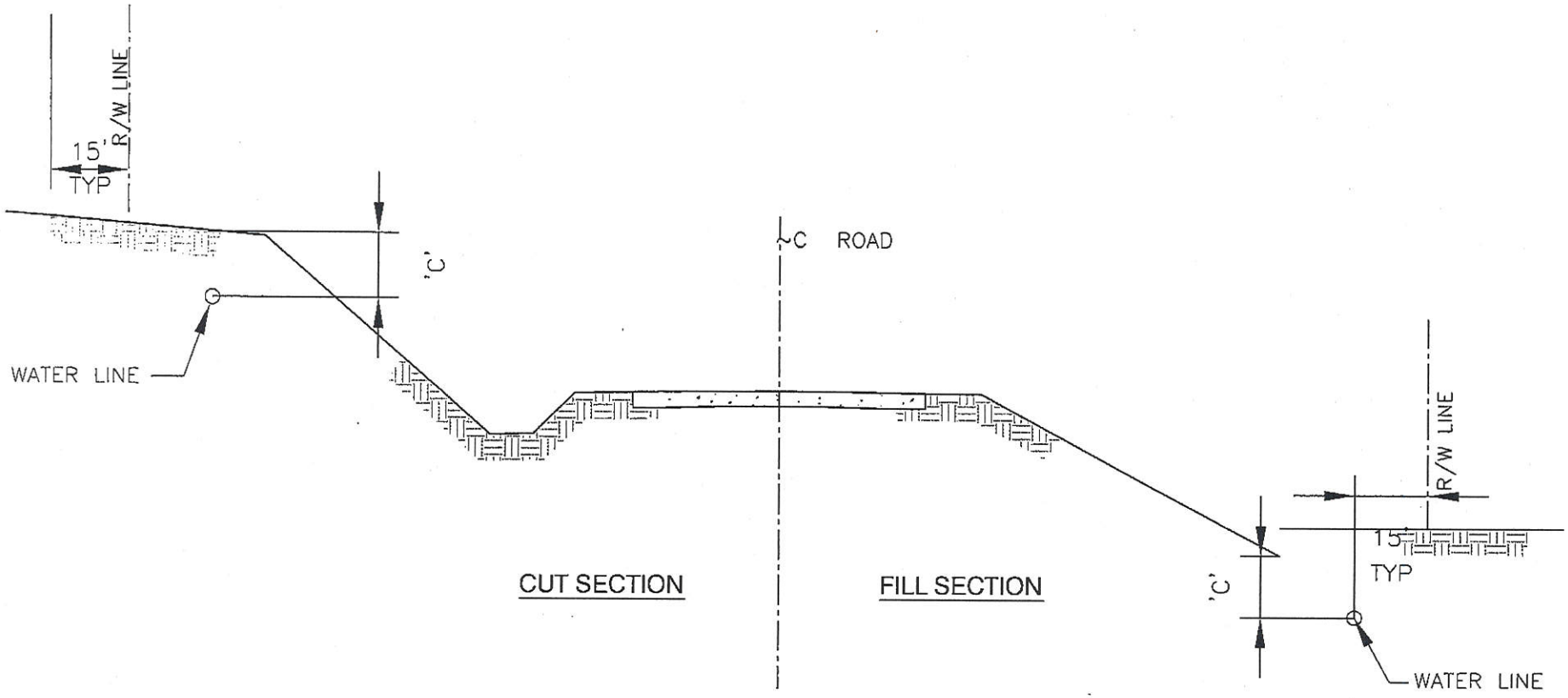

NOTES:

1. DIMENSION 'C' SHALL BE 84 INCHES MINIMUM TO 120 INCHES MAXIMUM.

BARTLETT & WEST

PHONE 800.474.4117

TYPICAL LINE INSTALLATION IN COUNTY ROAD RIGHT-OF-WAY

NOT TO SCALE

PROJ NO: 12483.000

DATE: 07-15-08

Drawing name: G:\12000\12483 Twin Tribes\colocad\12483.181 Twin Buttes Raw Water Line & MTL Replacement v2008.dwg Layout name: TYP CTY ROW Plotted by: DDAGOSTINO Plotted on: Jul 15, 2008 - 12:13pm

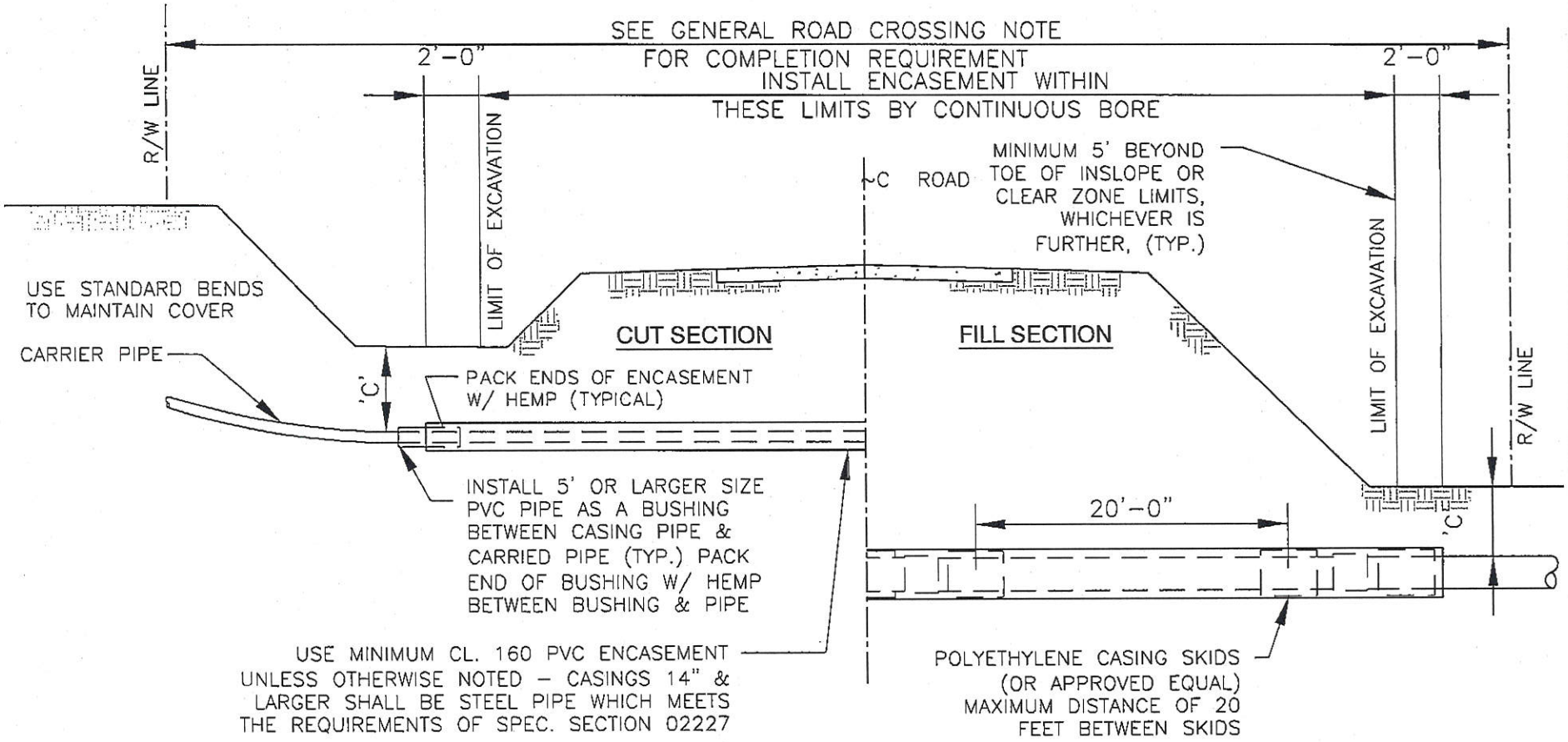

BARTLETT & WEST

PHONE 800.474.4117

TYPICAL TYPE 1 ROAD CROSSING

NOT TO SCALE

PROJ NO: 12483.000

DATE: 07-15-08

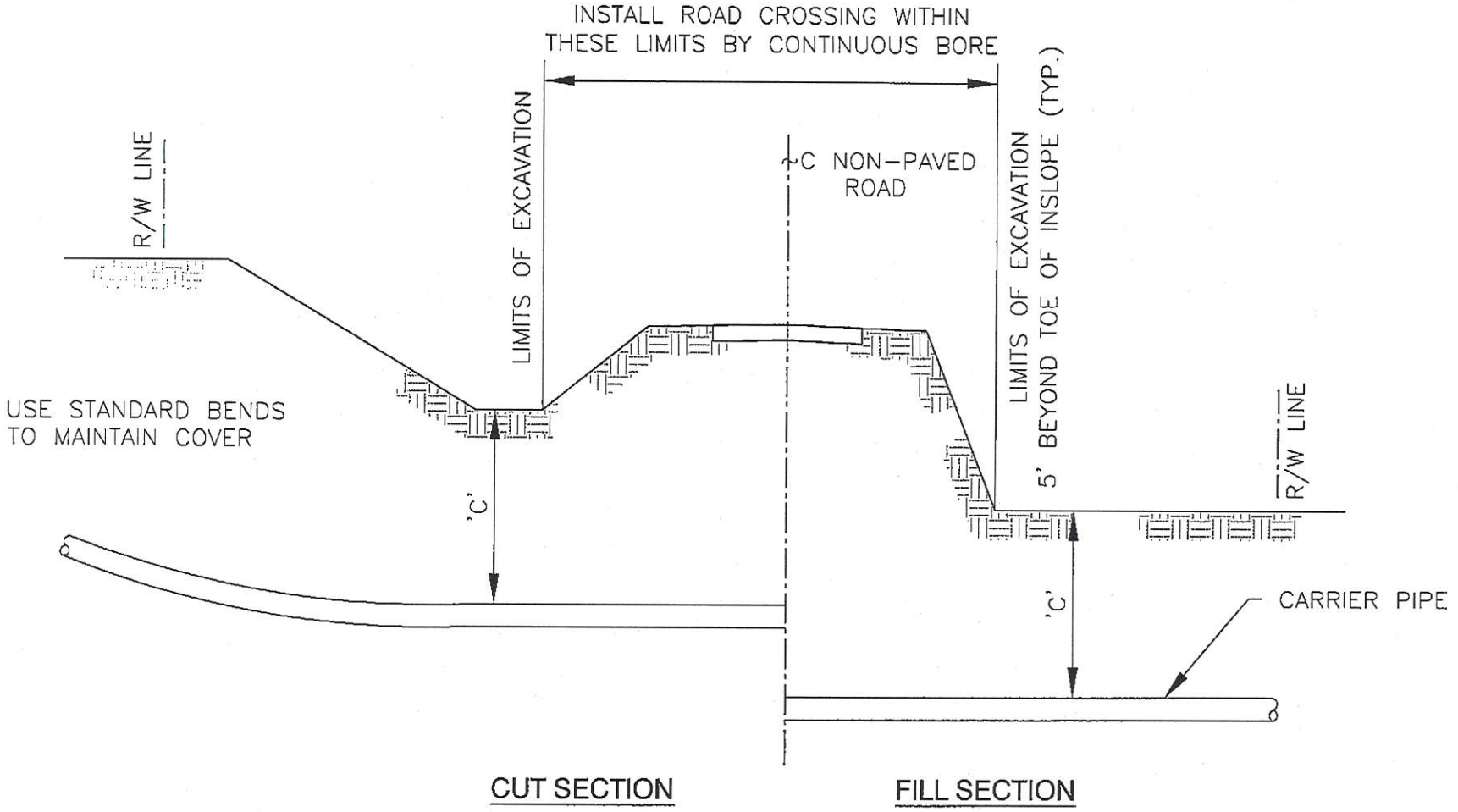

BARTLETT & WEST

PHONE 800.474.4117

TYPICAL TYPE 2, 3 & 4 ROAD CROSSING

NOT TO SCALE

PROJ NO: 12483.000

DATE: 07-15-08

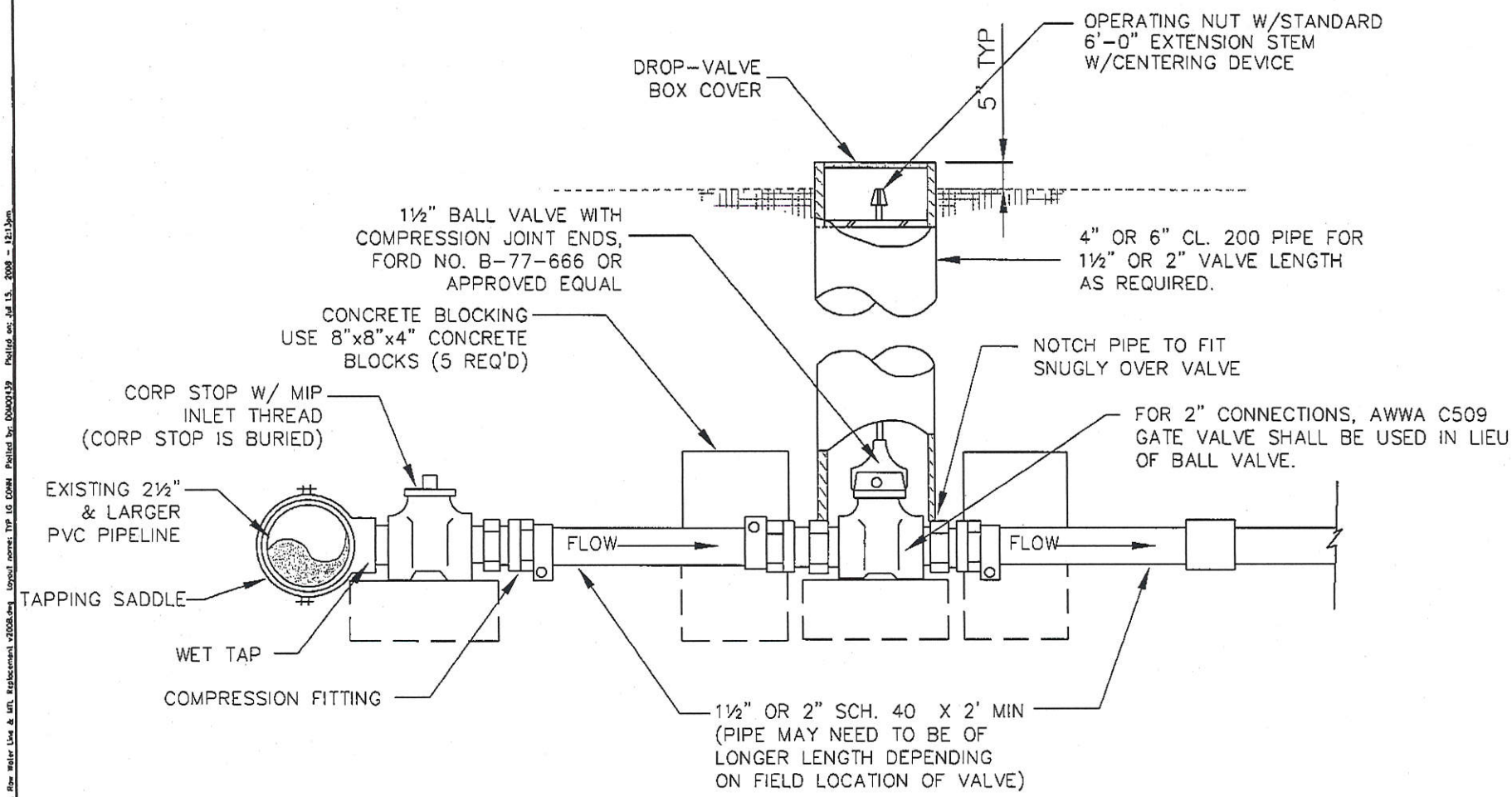

NOTES:

1 THIS DETAIL IS FOR TIE-INS OF 1½" OR 2" PIPELINE TO 2½" AND LARGER EXISTING PIPELINES. 1½" WET TAPS SHALL BE COMPLETED ON 3" AND LARGER EXISTING LINES AND 2" WET TAPS SHALL BE COMPLETED ON 4" AND LARGER LINES, EXCEPT THE DRILL HOLE SHALL BE 1½" DIAMETER.

2 FOR 2" TIE-INS AWWA C509 GATE VALVES AND 6" VALVE BOX & COVER SHALL BE USED. SCH. 40 PVC PIPE COUPLER NOT REQUIRED ON DOWNSTREAM SIDE OF 2" GATE VALVE.

BARTLETT & WEST

PHONE 800.474.4117

TYPICAL SMALL LINE TIE-INS TO EXISTING 2½" & LARGER PIPELINES

NOT TO SCALE

PROJ NO: 12483.000

DATE: 07-15-08

Drawing name: G:\12000\12483 Three Tribes\avlocad\12483.181 Twin Bullies\12483.181 Twin Bullies Raw Water Line & MTL Replacement v2008.dwg Layout name: TYP LG CONN Plotted by: DOM00439 Plotted on: Jul 15, 2008 - 12:13pm

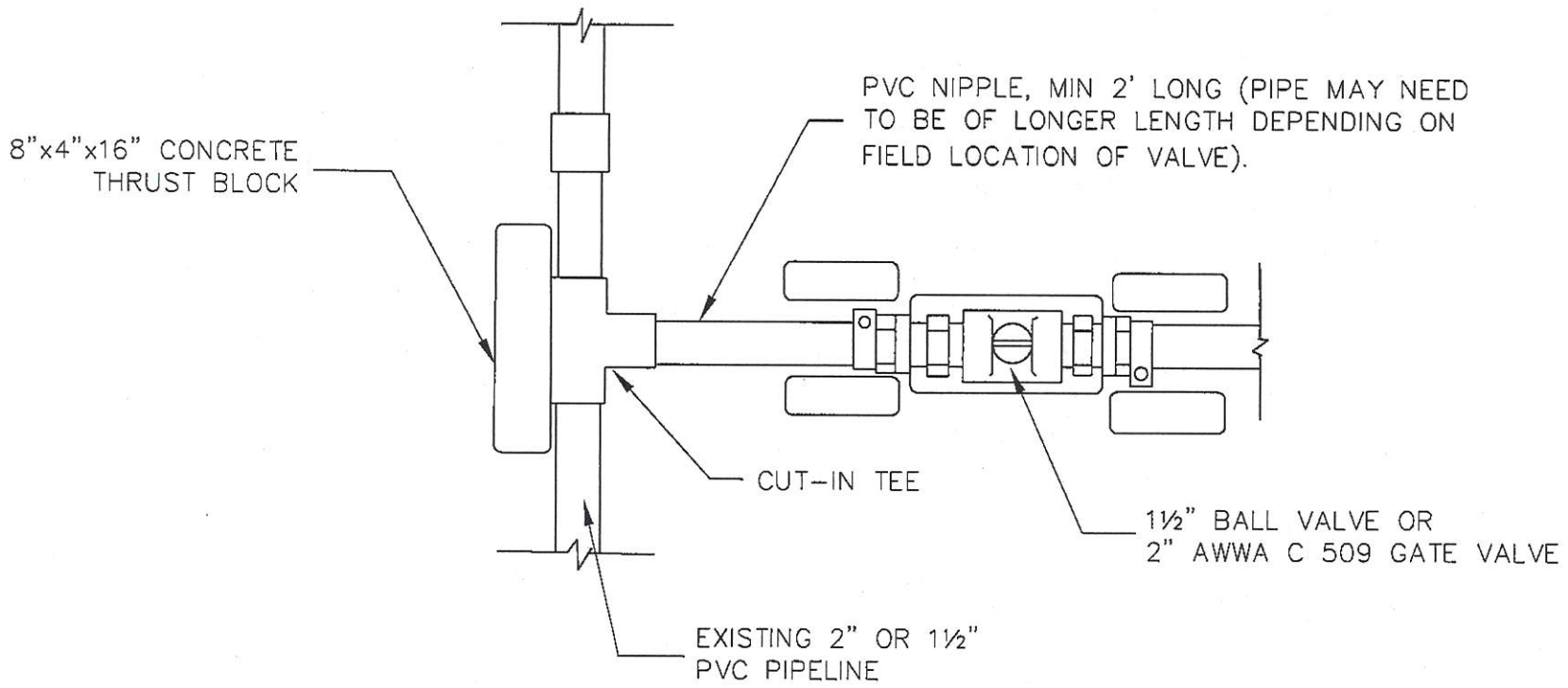

NOTES:

1. WHEN CONNECTING TO 2" AND SMALLER EXISTING PIPELINES, THE CONTRACTOR SHALL CUT IN A TEE AND INSTALL A SINGLE 1½" OR 2" VALVE AS REQUIRED. DISRUPTION OF WATER SERVICE SHALL BE IN ACCORDANCE WITH SPECIFICATION SECTION 01012. PAYMENT FOR 1½" AND 2" TIE-INS TO EXISTING PIPELINES SHALL BE IN ACCORDANCE WITH SPECIFICATION SECTION 01150.

BARTLETT & WEST
PHONE 800.474.4117

TYPICAL SMALL LINE CONNECTION TO EXISTING 2" & SMALLER PIPELINES

NOT TO SCALE

PROJ NO: 12483.000

DATE: 07-15-08

Drawing name: G:\12000\12483 Three Tribes\autocad\12483.181 Twin Buttes Raw Water Line & WTL Replacement v2008.dwg Layout name: TYP SM CONN Plotted by: 00N00439 Plotted on: Jul 15, 2008 - 12:13pm

Drawing name: G:\12000\12483 Three Tribes\autocad\12483.181 Twin Buttes\12483.181 Twin Buttes Raw Water Line & MTL Replacement v2008.dwg Layout name: TYP GATE VALVE Plotted by: DOM00439 Plotted on: Jul 15, 2008 - 12:14pm

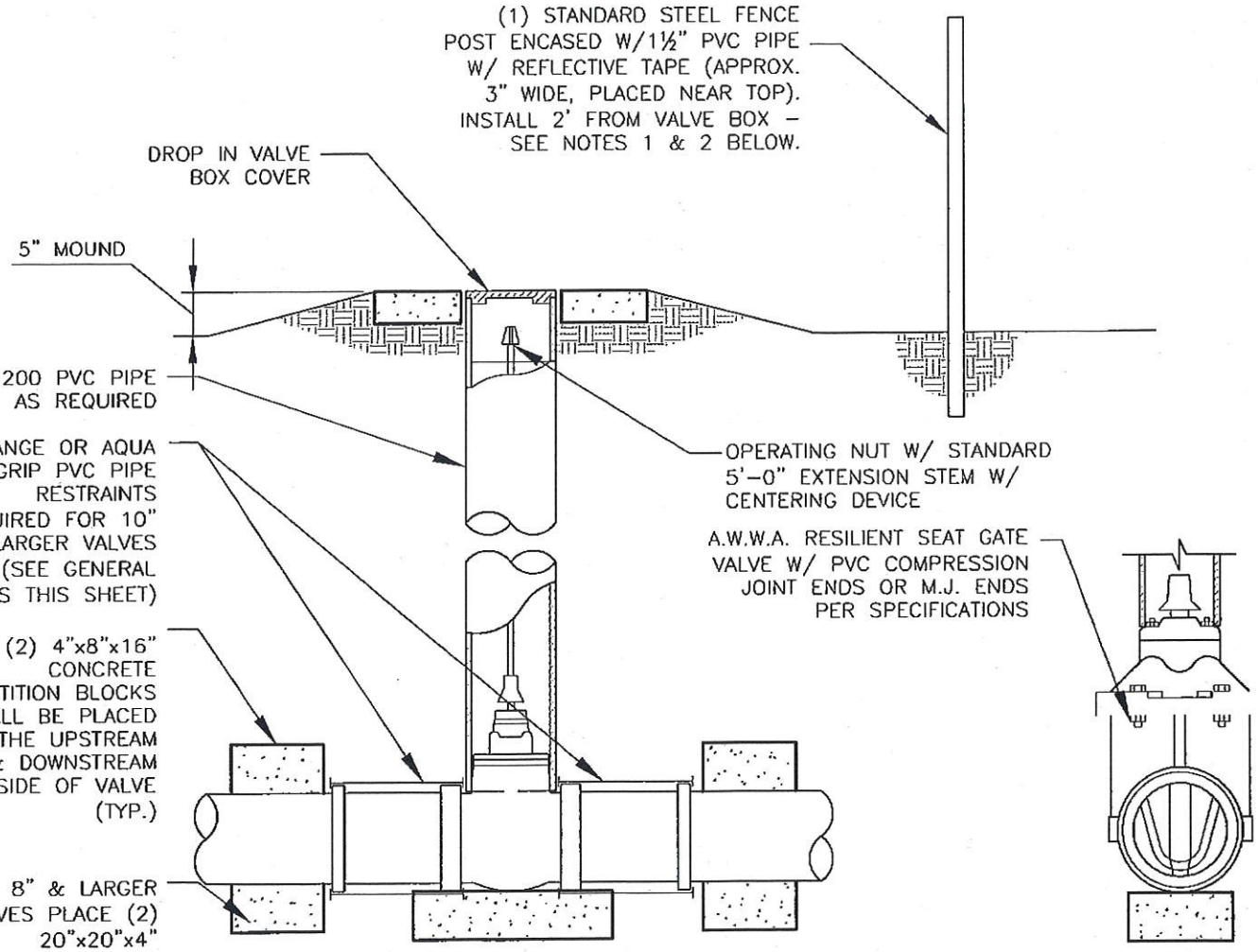

1.

2. NOTES:

PLACE POSTS AS FOLLOWS:
WHEN IN PRIVATE LAND, PLACE POST ADJACENT TO VALVE BOX.

WHEN IN PUBLIC RIGHT-OF-WAY, PLACE POST AT RIGHT-OF-WAY LINE OR FENCELINE. RECORD OFFSET DISTANCE ON RECORD DRAWINGS.

BARTLETT & WEST
PHONE 800.474.4117

TYPICAL GATE VALVE INSTALLATION

NOT TO SCALE

PROJ NO: 12483.000

DATE: 07-15-08

Drawing name: G:\12000\12483 Three Tribes\autocad\12483.181 Twin Buttes\12483.181 Twin Buttes Row Water Line & MTL Replacement v2008.dwg Layout name: TYP 1½ VALVE Plotted by: DDM00439 Plotted on: Jul 15, 2008 - 12:14pm

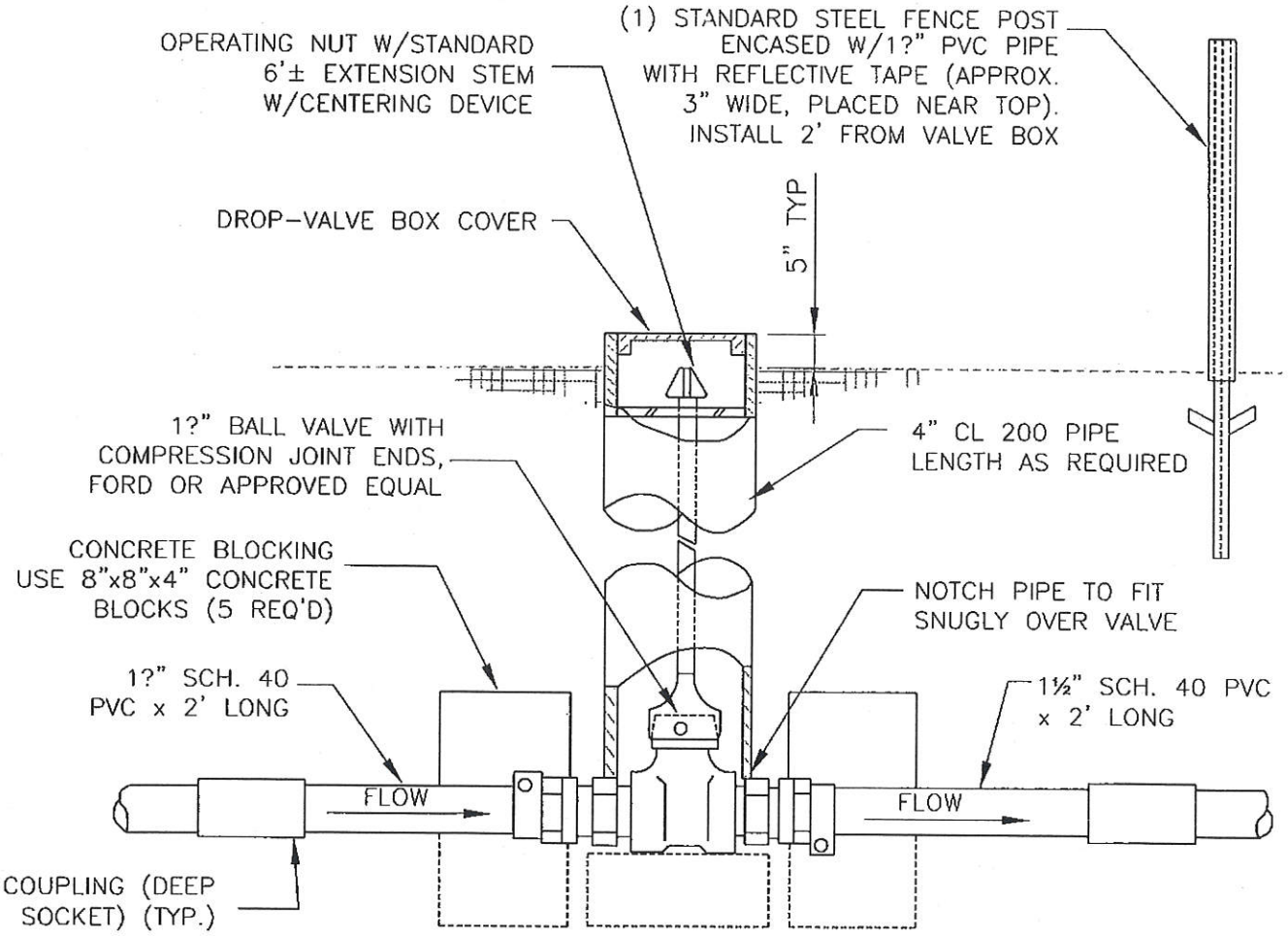

NOTES:

1 PLACE POST AS FOLLOWS:
- A. WHEN IN PRIVATE LAND, PLACE POST ADJACENT TO BOX.
- B. WHEN IN PUBLIC R/W. PLACE POST AT R/W LINE OR FENCELINE. RECORD OFFSET DISTANCE ON RECORD DRAWINGS.

2 UPON COMPLETION OF DISINFECTION AND FLUSHING OPERATIONS, THE CONTRACTOR SHALL CLOSE ALL 1?" SERVICE LINE VALVES, OWNER WILL OPEN VALVES UPON USER CONNECTING TO SYSTEM.

BARTLETT & WEST PHONE 800.474.4117	# TYPICAL 1½" VALVE INSTALLATION NOT TO SCALE	PROJ NO: 12483.000 DATE: 07-15-08

Addendum 1 to Three Affiliated Tribes
Natural Resource Department
Fort Berthold Rural Water Supply System
"Policy and Procedures for Water Service"

Date: May, 2012

The following changes are made to the "Policy and Procedures for Water Service" for the Fort Berthold Water Supply System

Approved on this _____ day of _____, 2012

Approved by _____

I. Section 3. Categories of System Water Users.

A. Delete Existing Part 1. 'Occasional User' and all narrative describing this category.

B. Add a new category as follows: '1. Resort Area or Recreational User: A resident of a resort area or a recreational area is classified as a resort area or recreational area user. Such users may be a home, cabin, or mobile home which serves as a primarily purpose of seasonally use for recreational purposes. Water may be provided to such areas and users by the installation of a central and single master meter vault from which the area and users may be requested to install their own internal system of pipelines, meters, valves, storage, and other associated items. The single master meter vault will be installed and maintained by FBRW; all facilities past the master meter vault will be installed and maintained by the users. No such master meter vault shall be installed however until the users of the area can provide proof of an operating entity for such area that will provide for operations and maintenance of the area installed facilities and will provide for a means and method of a central billing for such water. Water billing will be according to the provisions of Section 21 of this Policy. Water use for each individual user in this category shall be restricted to household and lawn watering and shall not exceed a monthly average of 4,500 gallons per month per user. Water may not be resold or used for any other purpose except as specifically noted herein.'

C. Add a new category as follows: '2. High Density Housing, Special Use: High Density Housing users are areas which are developed for the water needs for housing developments which service primarily the needs of the oil and energy development industry. Such developments may include or be referred to as man-camps, workman housing, or similar names.

Such developments may include conventional high density housing such as mobile home park developments, subdivision developments, apartments complexes, and similar developments if, in the opinion of FBRW, such developments are primarily for the needs of the oil and energy industry. Service to such users require a special and signed agreement between FBRW the user; no verbal representations of service will be valid. Service for such applicants, if approved, will be provided under the same restrictions and requirements as noted for the category of 'Resort or Recreational Users'. Cost of water for this category of user is provided in Section 21 of this policy. Water use for each individual user in this category shall be restricted to household and lawn watering and shall not exceed a monthly average of 4,500 gallons per month per user. Water may not be resold or used for any other purpose except as specifically noted herein.'

D. Revise Part 2. Municipal Household. The last sentence of this part to read as follows: 'Water use at said hookup shall be restricted to household and lawn watering as well as livestock use, when permitted by the municipality and shall not exceed a monthly average of 9,000 gallons per month.'

E. Revise Part 3. Rural Household. The last sentence of this part to read as follows: 'Water use at said hookup shall be restricted to household, lawn watering, and livestock use and shall not exceed a monthly average of 16,500 gallons per month.'

F. Under Part 5. Bulk Users add the following sentence: 'Bulk Users may be subject to a charge for both cost of infrastructure development and for water supply. Terms and conditions of such costs to such users will vary depending on factors of type of user, volume and demand of water, ability for FBRW to provide service, and other factors'.

G. Under Part 5. Add a new subsection 5.d. and 5e. as follows:

'd. Class IV Special User: Those individual users within a resort or recreational area who receive their water according to Section 4.4 of this Policy.'

e. Class V Special User: Those individual users within a High Density Housing area who receive their water according to Section 4.4 of this Policy.'

II. Section 4. FBRW System Responsibilities and Liabilities

A. In Part 4. Add the following language: 'Special Users have additional responsibilities relative to payment of water, terms of service, and logistics of connection to the FBRW system. Refer to Section 5 of this Policy for discussion of those requirements.'

III. Section 5. User Responsibility and Liabilities

A. Add a new Part 16 as follows: 'Class IV and Class V Special users may receive their water in one of the following ways. The option for service selected shall be by mutual consent of both the User and the FBRW.

Option 1. Water Delivery; Existing Interior Infrastructure In Place. For those areas which have an existing storage system and distribution system, FBRW will, subject to limitations of funding and water availability, construct a main supply line to a mutually agreed upon point of connection at which point FBRW will either:

- Install a master meter and control vault to provide a constant flow to the users. Such constant flow would be provided into a storage reservoir which would be owned and operated by the Users.
- Install individual meters to the users of the area, using the storage reservoir of the area for storage and distribution of water. Meters will be installed on exiting liens of the Special User.

Cost of providing the infrastructure to deliver the water to the point of connection would be the responsibility of FBRW; cost of providing infrastructure past the point of connection would be the responsibility of the Users. If a master meter is used all water delivered to the point of connection would be metered by a single master meter; a monthly billing based on that meter reading would be sent to a single User billing address. The User is responsible of proration and collection of bills from all individual services as served by the master meter and shall submit to FBRW according to the terms of a water service agreement.

Option 2. Water Delivery; Existing Interior Infrastructure To Be Constructed. For those areas which do not have an existing storage system and distribution system, FBRW will, subject to limitations of funding and water availability, construct a main supply line to a mutually agreed upon point of connection at which point FBRW will either:

- Install a master meter and control vault to provide a constant flow to the users. Such constant flow would be provided into a storage reservoir which would be owned and operated by the Users.
- Install individual services to the users of the area using a FBRW system reservoir in the area for storage and distribution of water. Meters will be installed on lines to be constructed by the Special User.

Cost of providing the infrastructure to deliver the water to the point of connection would be the responsibility of FBRW; cost of providing infrastructure past the point of connection would be the responsibility of the Users. If a master meter is used all water delivered to the point of connection would be metered by a single master meter; a monthly billing based on that meter reading would be sent to a single User billing address. The User is responsible of proration and collection of bills from all individual services as served by the master meter and shall submit to FBRW according to the terms of a water service agreement.

IV. Section 21. Cost of Service.

A. New part 5. is added as follows:

For any expense which FBRW incurs in the construction of infrastructure within recreational areas or subdivisions or within or for the specific needs of High Density Housing, Special User category areas, FBRW shall provide a payment

schedule to the users of the area which allows a cost recovery program to FBRW for such expenses. The cost recovery shall provide a long term repayment of the costs of service to the area. FBRW may however, with concurrence of applicable funding and tribal agencies make a waiver on the payment of such capital costs if funding is provided to the FBRW to allow such waiver. Waiver of capital costs, if it occurs, does not imply a waiver of water charges. Charge for water shall apply to all recreational areas and subdivisions unless otherwise waived by FBRW.

B. New Part 6 is added as follows:

Costs of water for all users is established as follows:

1. For all Users who are identified under Section 3 of this Policy as either Municipal Household or Rural Household, there is no charge for water from FBRW so long as such users conform to the requirements of this Policy and to the extent that federal funding or regulatory requirements do not necessitate any charge for such water.

2. For all Livestock Users as defined under Section 3 of this Policy there is no charge for water from FBRW so long as such users conform to the requirements of this Policy and to the extent that federal funding or regulatory requirements do not necessitate any charge for such water.

3. For all Resort Area or Recreational Area users as defined under Section 3 of this Policy there will be both a charge for water provided and for any infrastructure which FBRW may construct and may be charged to the user per the requirements of this Policy. The water use rate charged to any given user may be variable but generally will be within a _____ per 1,000 gallon to $ _____ per 1,000 gallon range plus may include a per meter charge per month.

4. For all other users as defined under Section 3 of this Policy there will be both a charge for water provided and for any infrastructure which FBRW may construct and may be charged to the user per the requirements of this Policy. The water use rate charged to any given user may be variable but generally will be within a _____ per 1,000 gallon to $ _____ per 1,000 gallon range plus may include a per meter charge per month.